REL NO	LTR	NO	REVISION	ZONE	DWN	CKD	APVD	DATE
ECO-100339	B	1	SEE ECO FOR DETAILS	-	SMM	MT	MT	06-11-08

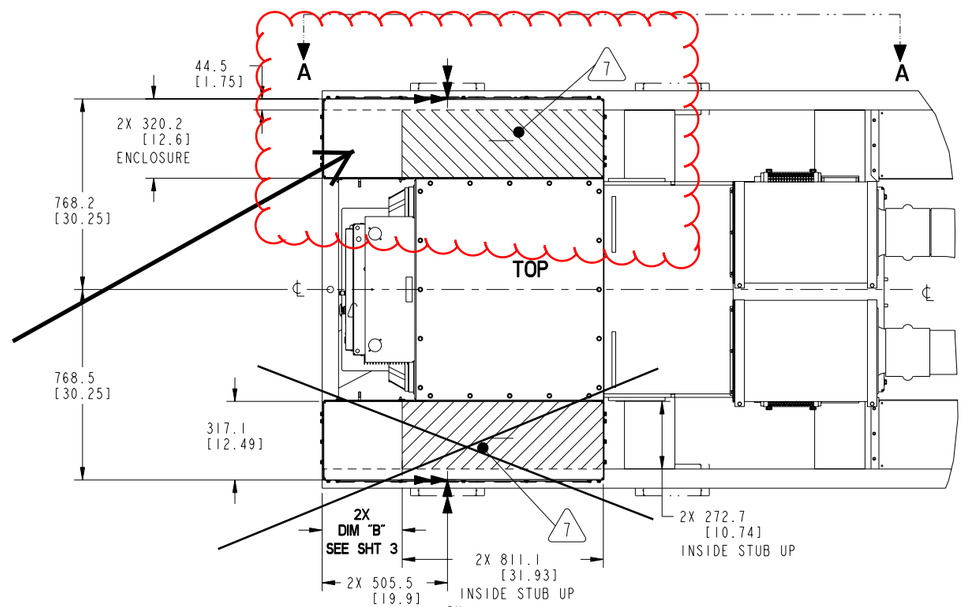

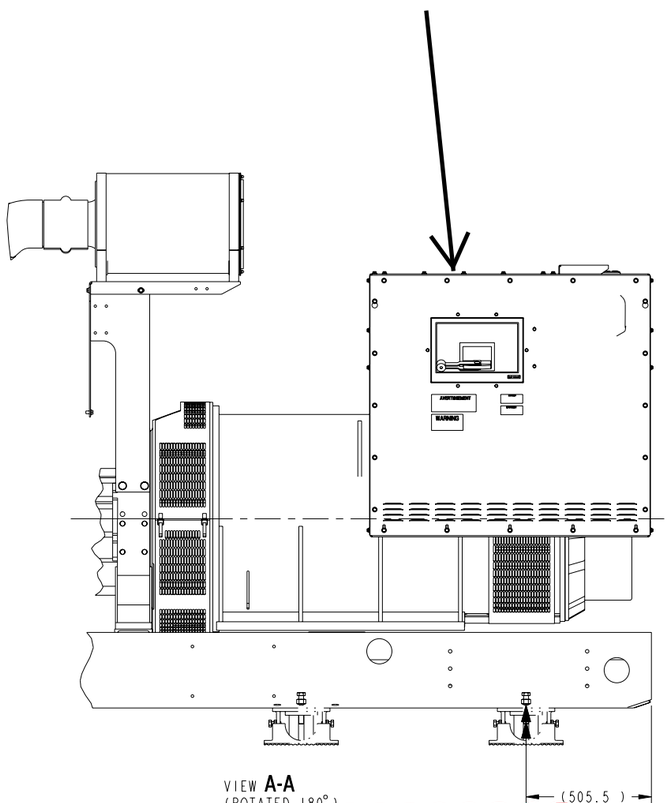

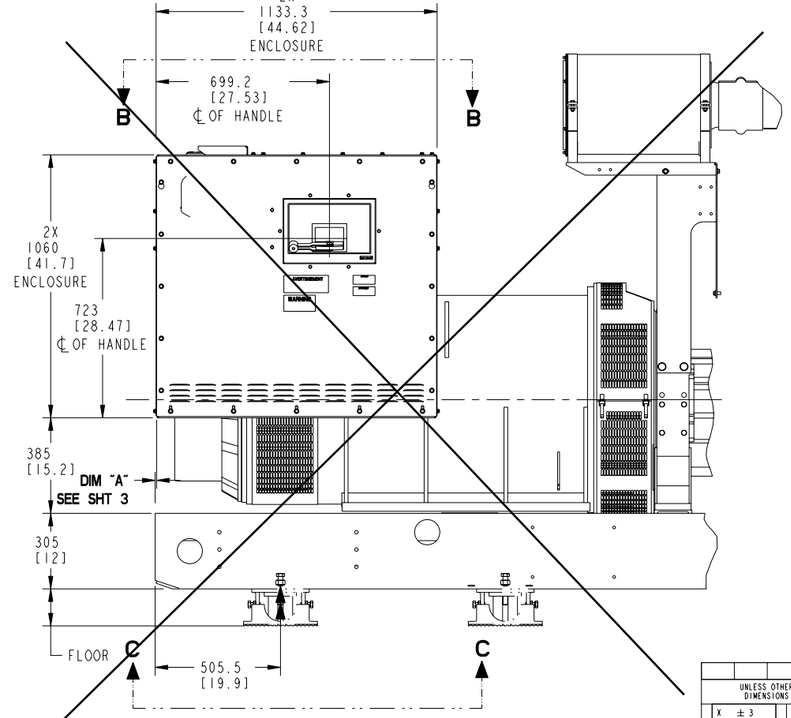

NOTE:

1. DIMENSIONS SHOWN IN [ ] ARE IN INCHES.
2. COMMON REFERENCE POINT ON GENSET SKID (⟶). POINTS TO ANCHORING HOLE ON SKID. SEE GENSET_OUTLINE (FOUNDATION) FOR DETAILS.
3. LISTED TORQUE VALUES ARE FOR MAXIMUM CONDUCTOR SIZES ACCOMMODATED. CONSULT UL 486 TABLE 7-4, 7-5 AND 7-6 FOR SMALLER CONDUCTOR SIZES.
4. ALL ITEMS SHOWN IN ILLUSTRATION ARE FOR REFERENCE ONLY.
5. ELECTRICAL CONDUITS MUST:
   - PROVIDE FLEXIBLE CONNECTION (USING FLEXIBLE CONDUIT AND CABLES). -LFMC
   - INSTALLED IN A WAY THAT IT WILL ABSORB OR REDUCE VIBRATION CONDITIONS, FOR EXAMPLE: ADD OFF-SET BENDS, BETWEEN THE MOUNTING SURFACE OF THE CIRCUIT BREAKER ENCLOSURE AND THE STUB AREA ORIGINATING IN CONCRETE OR THE TYPE OF BASE FLOORING.
6. FLEXIBLE CONDUITS MUST ALLOW FOR GENERATOR SET MOVEMENT AS MUCH AS ±50 [2] IN THE VERTICAL DIRECTION.
7. AREA SHOWN INDICATES APPROXIMATE OFFSET PLACEMENT OF THE ELECTRICAL FLEXIBLE CONDUIT STUB-UP AREA ORIGINATING IN CONCRETE OR OTHER TYPE OF BASE FLOORING RELATIVE TO CIRCUIT BREAKER LOCATION WITHIN ENCLOSURE TO PROVIDE VIBRATION PROTECTION.
8. WIRE-CONDUIT COMBINATIONS MEET NEC AND CEC. TO USE OTHER COMBINATIONS, REFER TO APPLICABLE CODES TO ENSURE THAT WIRE AMPACITY, BEND SPACE AND GUTTER SPACE MEET THE REQUIREMENTS.
9. SHUNT TRIP UNITS CAN BE OPERATED AT 75% OF NOMINAL VOLTAGE AND WILL ACCEPT MOMENTARY OR CONTINUOUS APPLIED VOLTAGE.
10. SHUNT TRIP UNITS CAN BE OPERATED AT 70% TO 100% OF NOMINAL VOLTAGE AND WILL ACCEPT MOMENTARY OR CONTINUOUS APPLIED VOLTAGE.
11. ALL DIMENSIONS SHOWN FOR RIGHT SIDE ENTRY ALSO APPLY TO LEFT SIDE ENTRY IN MIRROR ORIENTATION.
12. ALTERNATOR MODEL P734G & R-FRAME CIRCUIT BREAKER ARE BEING SHOWN FOR DRAWING SIMPLICITY.
13. "NS" SHUNT TRIP HAS NO INTERNAL CONTACTS, IT MUST BE USED IN CONJUNCTION WITH AUXILIARY CONTACTS TO ACCEPT CONTINUOUS APPLIED VOLTAGE. IT CAN OPERATE AT 75% OF NOMINAL VOLTAGE.
14. 800 AMP BREAKER: A LUG ACCEPTING (2) 3/0-600 kcmil CONDUCTORS IS AVAILABLE THRU ACCESSORIES. PGA PART NUMBER 0332-4278.
15. 1200 AMP BREAKER: A LUG ACCEPTING (3) 3/0-600 kcmil CONDUCTORS IS AVAILABLE THRU ACCESSORIES. PGA PART NUMBER 0332-4279.

QTY	ITEM	PART NO	DESCRIPTION OR MATERIAL

UNLESS OTHERWISE SPECIFIED, ALL DIMENSIONS ARE IN MILLIMETERS

DIM: X ± 3; .X ± 0.8; .XX ± 0.38

HOLE: 0.00- 4.99 +0.15/-0.08; 5.00- 9.99 +0.20/-0.10; 10.00-17.49 +0.25/-0.13; 17.50-24.99 +0.30/-0.13

ANG TOL: ± 1.0° SCALE: 3/32

SIM TO . DO NOT SCALE PRINT

- CONFIDENTIAL - PROPERTY OF CUMMINS POWER GENERATION GROUP

DWN LANDRUS
CKD L_NAVARRETE
APVD L_NAVARRETE
DATE 12-15-06

FOR INTERPRETATION OF DIMENSIONING AND TOLERANCING, SEE ASME Y14.5M-1994

FIRST USED ON DFLB,C,E

SITE CODE PGF

CUMMINS POWER GENERATION
1400 73RD AVENUE NE, MINNEAPOLIS, MN 55432

CIRCUIT BRKR OUTLINE
(50 LITER)

DWG SIZE D 0500_4537 SHEET 1 of 3 DWG REV B

Pro/ENGINEER

REL NO	LTR	NO	REVISION	ZONE	DWN	CKD	APVD	DATE
ECO-100339	B	1	SEE ECO FOR DETAILS	-	SMM	MT	MT	06-11-08

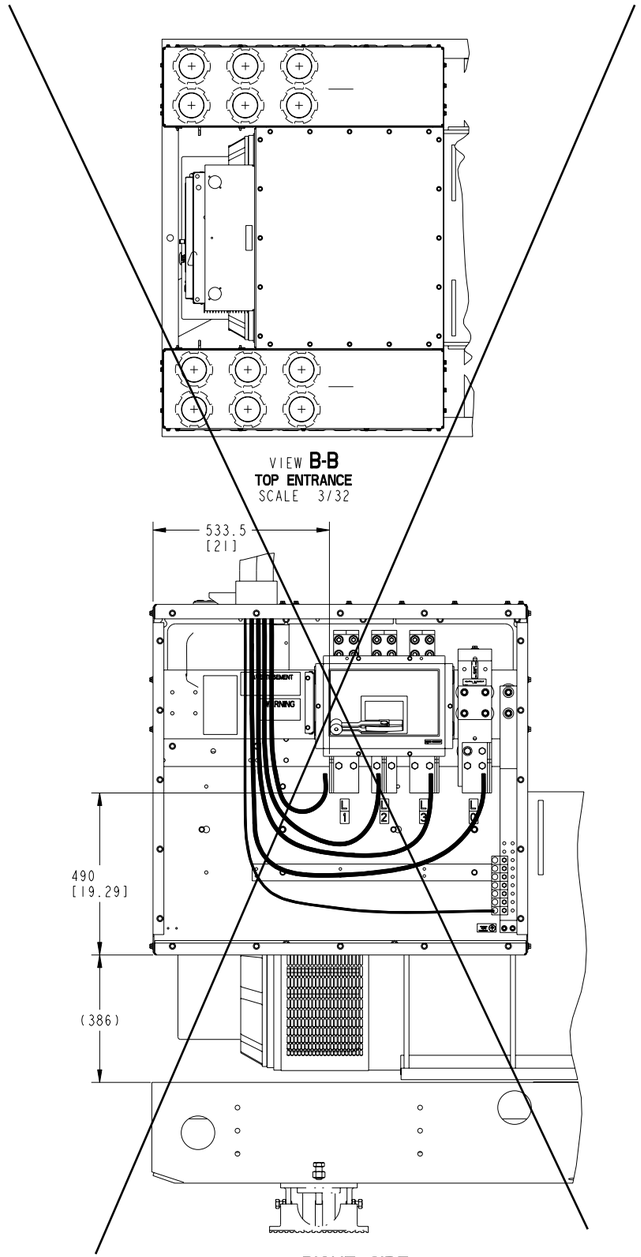

RIGHT SIDE
TOP ENTRY ROUTING EXAMPLE
SCALE 1/8

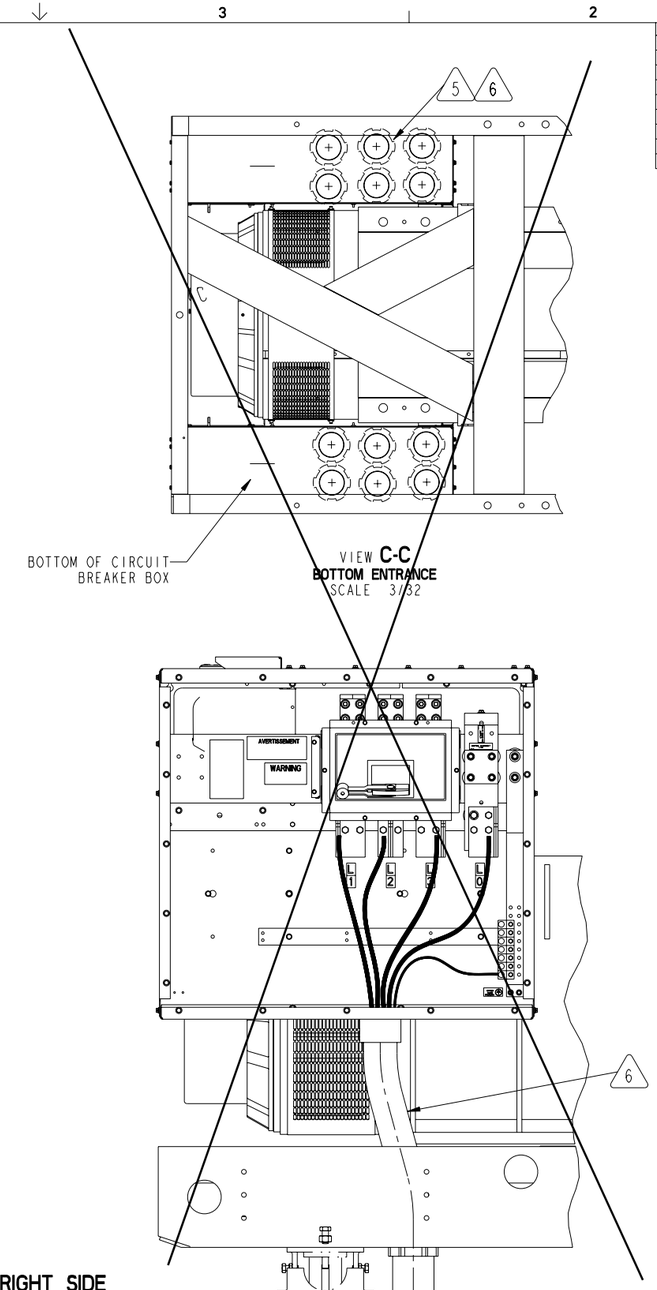

RIGHT SIDE
BOTTOM ENTRY ROUTING EXAMPLE
SCALE 1/8

QTY	ITEM	PART NO	DESCRIPTION OR MATERIAL

UNLESS OTHERWISE SPECIFIED, ALL DIMENSIONS ARE IN MILLIMETERS

DIM: X ± 3; .X ± 0.8; .XX ± 0.38

HOLE: 0.00- 4.99 +0.15/-0.08; 5.00- 9.99 +0.20/-0.10; 10.00-17.49 +0.25/-0.13; 17.50-24.99 +0.30/-0.13

ANG TOL: ± 1.0° SCALE: 3/64

SIM TO .

DO NOT SCALE PRINT

- CONFIDENTIAL -
PROPERTY OF CUMMINS POWER GENERATION GROUP

DWN LANDRUS
CKD L_NAVARRETE
APVD L_NAVARRETE
DATE 12-15-06

FOR INTERPRETATION OF DIMENSIONING AND TOLERANCING, SEE ASME Y14.5M-1994

FIRST USED ON DFLB,C,E

SITE CODE PGF

CUMMINS POWER GENERATION
1400 73RD AVENUE NE, MINNEAPOLIS, MN 55432

CIRCUIT BRKR OUTLINE
(50 LITER)

DWG SIZE D | 0500_4537 | SHEET 2 of 3 | DWG REV B

Pro/ENGINEER

REL NO	LTR	NO	REVISION	ZONE	DWN	CKD	APVD	DATE
ECO-100339	B	1	SEE ECO FOR DETAILS	-	SMM	MT	MT	06-11-08

TABLE 1

UL/IEC LUGS					ACCESSORY SPECIFICATIONS			
LUG	FRAME	MAX AMPS	WIRE RANGE COPPER	DIM D ±25 [1.0]	ACCESSORY DESCRIPTION	CONTACT RATING	INRUSH	CONNECTION TYPE
	SQUARE D NSJ	400A 3 OR 4 POLE	#2-600 KCMIL	554 [21.8]	24 VDC SHUNT TRIP	----------	10A (10)	COMPRESSION TERMINALS #20-16 AWG OR SMALLER TORQUE: 10 LB-IN
	SQUARE D NSJ W/STR23SP TRIP UNIT	600A 3-POLE	2/0-350 KCMIL	554 [21.8]	24 VDC SHUNT TRIP	----------	10A (10)	COMPRESSION TERMINALS #20-16 AWG OR SMALLER TORQUE: 10 LB-IN
					1 EA. FORM C 1 AUX CONTACT + 1 TRIP ALARM	6A AT 240 VAC, 6A AT 480 VAC, 3A AT 600 VAC, 2.5A AT 48 VDC, 0.8A AT 125VDC, 0.3A AT 250 VDC	----	
(14)	SQUARE D P 800 W/MICROLOGIC 3.0 TRIP UNIT	800A 3-POLE	3/0-500 KCMIL	599 [23.5]	24 VDC SHUNT TRIP	----------	200VA (10)	COMPRESSION TERMINALS FOR 1 OR 2 #18-14 AWG. TORQUE: 10 LB-IN
					1 EA. FORM C 1 AUX CONTACT + 1 TRIP ALARM	6A AT 240 VAC, 6A AT 480 VAC, 3A AT 600 VAC, 2.5A AT 48 VDC, 0.8A AT 125VDC, 0.3A AT 250 VDC	----	COMPRESSION TERMINALS FOR 1 OR 2 #18-16 AWG. TORQUE: 10 LB-IN
(15)	SQUARE D P 1200 W/MICROLOGIC 3.0 TRIP UNIT	1200A 3-POLE	3/0-500 KCMIL	556 [21.8]	24 VDC SHUNT TRIP	----------	200VA (10)	COMPRESSION TERMINALS FOR 1 OR 2 #18-14 AWG. TORQUE: 10 LB-IN
					1 EA. FORM C 1 AUX CONTACT + 1 TRIP ALARM	6A AT 240 VAC, 6A AT 480 VAC, 3A AT 600 VAC, 2.5A AT 48 VDC, 0.8A AT 125VDC, 0.3A AT 250 VDC	----	COMPRESSION TERMINALS FOR 1 OR 2 #18-16 AWG. TORQUE: 10 LB-IN
	SQUARE D R 2500/2000/1600 3-POLE 1600-2500 AMP BUS BARS STANDARD W/MICROLOGIC 3.0 TRIP UNIT		NEMA HOLE PATTERN	490 [19]	24 VDC SHUNT TRIP	----------	200VA (10)	COMPRESSION TERMINALS FOR 1 OR 2 #18-14 AWG. TORQUE: 10 LB-IN
					1 EA. FORM C 4 AUX CONTACT + 1 TRIP ALARM	6A AT 240 VAC, 6A AT 480 VAC, 3A AT 600 VAC, 2.5A AT 48 VDC, 0.8A AT 125VDC, 0.3A AT 250 VDC	----	COMPRESSION TERMINALS FOR 1 OR 2 #18-16 AWG. TORQUE: 10 LB-IN
	(3) R 2500/2000/1600 W/OPTIONAL LUG 1600-2500 AMP BREAKERS TORQUE 375 IN LBS [42 Nm]		#2-600 KCMIL	490 [19]	24 VDC SHUNT TRIP	----------	200VA (10)	COMPRESSION TERMINALS FOR 1 OR 2 #18-14 AWG. TORQUE: 10 LB-IN
					1 EA. FORM C 4 AUX CONTACT + 1 TRIP ALARM	6A AT 240 VAC, 6A AT 480 VAC, 3A AT 600 VAC, 2.5A AT 48 VDC, 0.8A AT 125VDC, 0.3A AT 250 VDC	----	COMPRESSION TERMINALS FOR 1 OR 2 #18-16 AWG. TORQUE: 10 LB-IN

TABLE 2

TYPICAL CONDUIT AND WIRE SIZE BASED ON NEC 2008, ARTICLE 310.15 AT 75C TEMPERATURE RATED CONDUCTOR AT 30C AMBIENT AND ANNEX C (LIQUID TIGHT FLEXIBLE METAL CONDUIT - LFMC)

(8)

MAX BRKR AMPS	WIRE (COPPER)		CABLE AMPACITY	TOTAL NUMBER OF CONDUITS	
	QTY	SIZE		QTY	SIZE (IN INCHES)
2500	6	600 KCMIL	420	6	4
2000	5	600 KCMIL	420	5	4
1600	5	600 KCMIL	420	5	4
1200	3	500 KCMIL	385	3	3
1000	3	400 KCMIL	335	3	3
800	2	300 KCMIL	285	2	3
630	2	350 KCMIL	310	2	3
600	2	350 KCMIL	310	2	3
400	1	600 KCMIL	420	1	4
250	1	250 KCMIL	255	1	2 1/2
100	1	2 KCMIL	115	1	2

TYPICAL CONDUIT AND WIRE SIZE BASED ON NEC 2008, ARTICLE 310.15 AND TABLE 310-16 AT 75C TEMPERATURE RATED CONDUCTOR AT 40C AMBIENT AND ANNEX C (LIQUID TIGHT FLEXIBLE METAL CONDUIT - LFMC)

(8)

MAX BRKR AMPS	WIRE (COPPER)		CABLE AMPACITY	TOTAL NUMBER OF CONDUITS	
	QTY	SIZE		QTY	SIZE (IN INCHES)
2500	6	750 KCMIL	418	6	4
2000	5	700 KCMIL	405	5	4
1600	4	700 KCMIL	405	4	4
1000	3	500 KCMIL	334	3	3 1/2
800	3	350 KCMIL	273	3	3

TABLE 3

GENSET MODEL	ALTERNATOR MODEL	DIM "A"	DIM "B"
☐ DFLB ☐ DFLC ☐ DFLE ☐ DQGAA ☐ DQGAB	☐ P734B	247.6 [9.75]	569.8 [22.43]
	☐ P734C	247.6 [9.75]	569.8 [22.43]
	☐ P734D	98.6 [3.89]	420.8 [16.57]
	☐ P734E	98.6 [3.89]	420.8 [16.57]
	☐ P734F	3.6 [.14]	325.8 [12.83]
	☐ P734G	3.6 [.14]	325.8 [12.83]

QTY	ITEM	PART NO	DESCRIPTION OR MATERIAL

UNLESS OTHERWISE SPECIFIED, ALL DIMENSIONS ARE IN MILLIMETERS

DIM: X ± 3; .X ± 0.8; .XX ± 0.38

HOLE: 0.00- 4.99 +0.15/-0.08; 5.00- 9.99 +0.20/-0.10; 10.00-17.49 +0.25/-0.13; 17.50-24.99 +0.30/-0.13

ANG TOL: ± 1.0° SCALE: 3/64

SIM to .

DO NOT SCALE PRINT

- CONFIDENTIAL - PROPERTY OF CUMMINS POWER GENERATION GROUP

DWN LANDRUS
CKD L_NAVARRETE
APVD L_NAVARRETE
DATE 12-15-06

FOR INTERPRETATION OF DIMENSIONING AND TOLERANCING, SEE ASME Y14.5M-1994

FIRST USED ON DFLB,C,E

SITE CODE PGF

CUMMINS POWER GENERATION
1400 73RD AVENUE NE, MINNEAPOLIS, MN 55432

CIRCUIT BRKR OUTLINE
(50 LITER)

DWG SIZE D | 0500_4537 | SHEET 3 of 3 | DWG REV B

Pro/ENGINEER